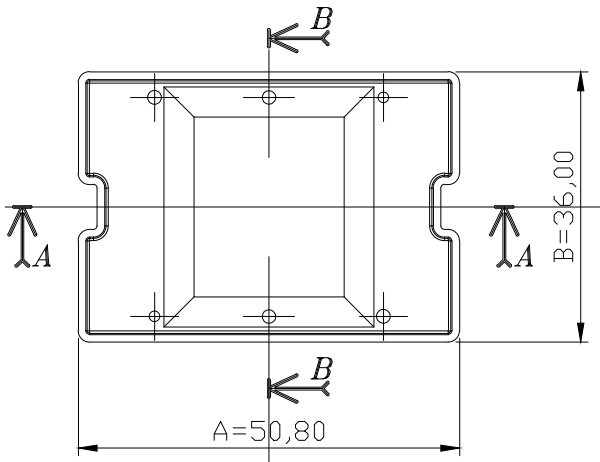

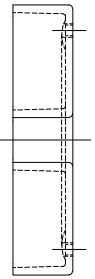

SECTION B-B

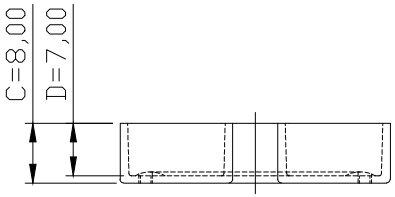

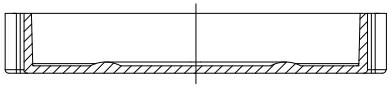

SECTION A-A

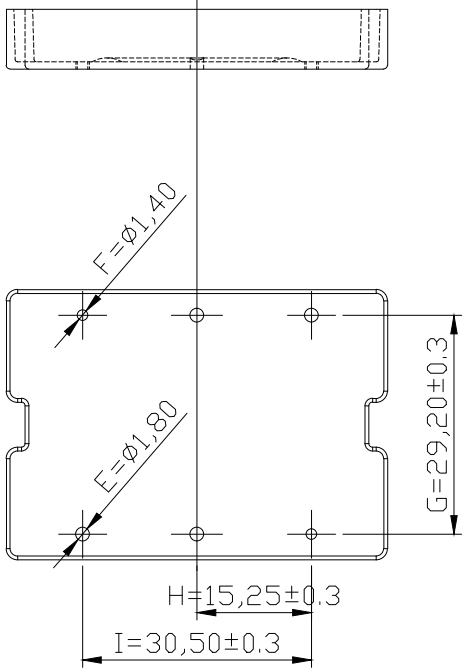

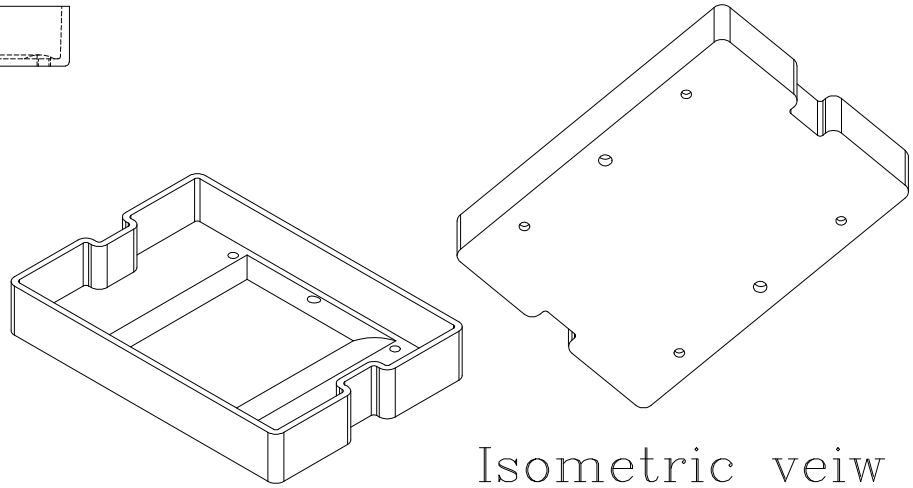

Isometric veiw

MARK	REVISION NOTE	DATE	DRAWN	CHECKED	APPROVED
4					
3					
2					
1					

DRAWN	CHECKED	APPROVED	MATERIAL : P.E.T (FR530)	UL REC. : UL94V-0	THIRD ANGLE PROJ.	SCALE : 1/1
D M ,Choe	G Y, Lim	J B, Lim	Z : PIN LENGTH (According to customer's request)	DATE : 2010.11.29	TOLERANCE :±0.2 (Unless otherwise specified)	UNIT : m/m
주식회사 대흥보빈 DAE HEUNG BOBBIN CO., LTD			TITLE OR ø58 BASE (C)		DWG NO DH-101209-6075-07	